Product and Cut-out Dimensions Touch Control Electric Cooktop KM5880

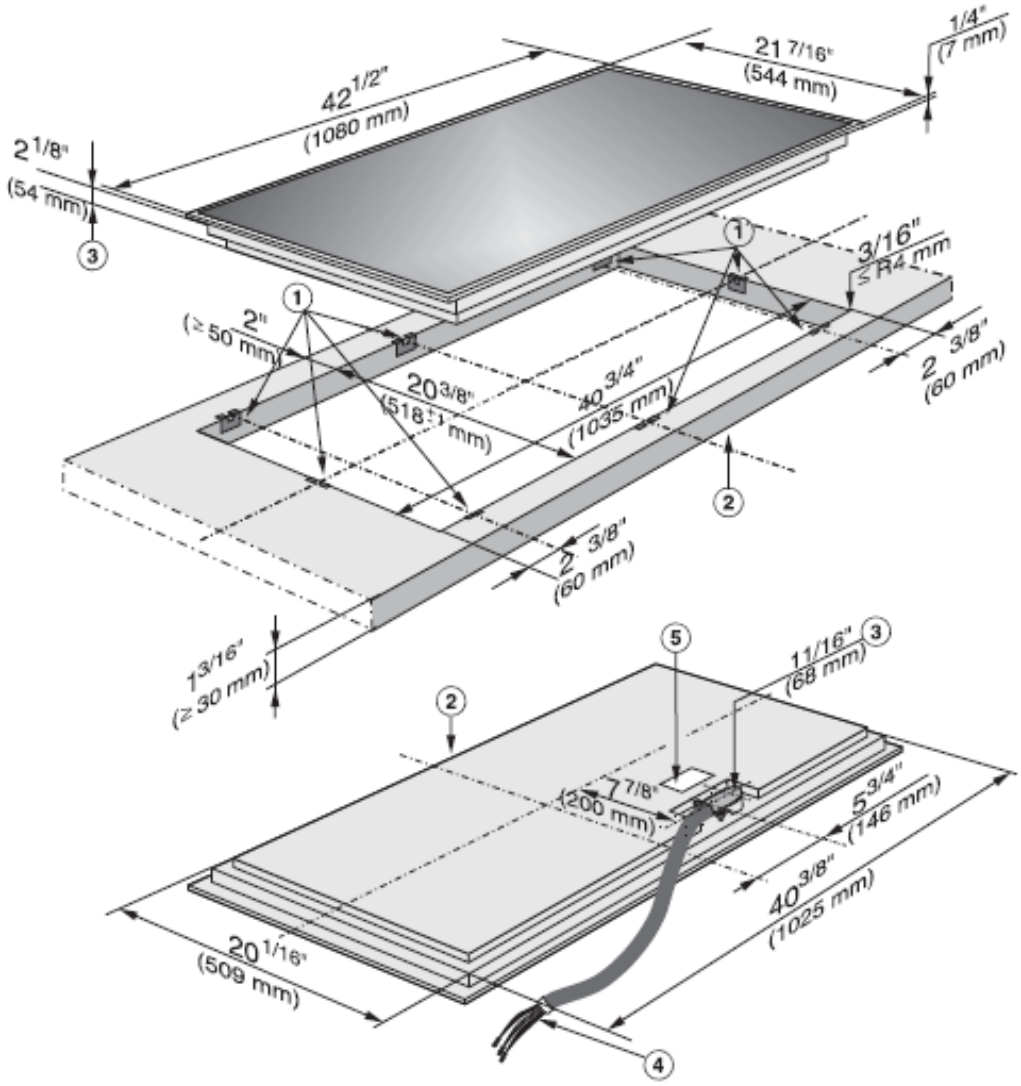

①Spring clips

②Front

③Installation height

④Connecting cable, Length = 56 11/16" (1440 mm)

⑤Rating label

Location Codes

E- 240 - 50 Amp 3-wire power supply connects rear center bottom

208 V- requires 60 Amp 3-wire power supply

Please specify 208 volt or 240 volt unit when ordering.

All installations must be done in accordance with local code.